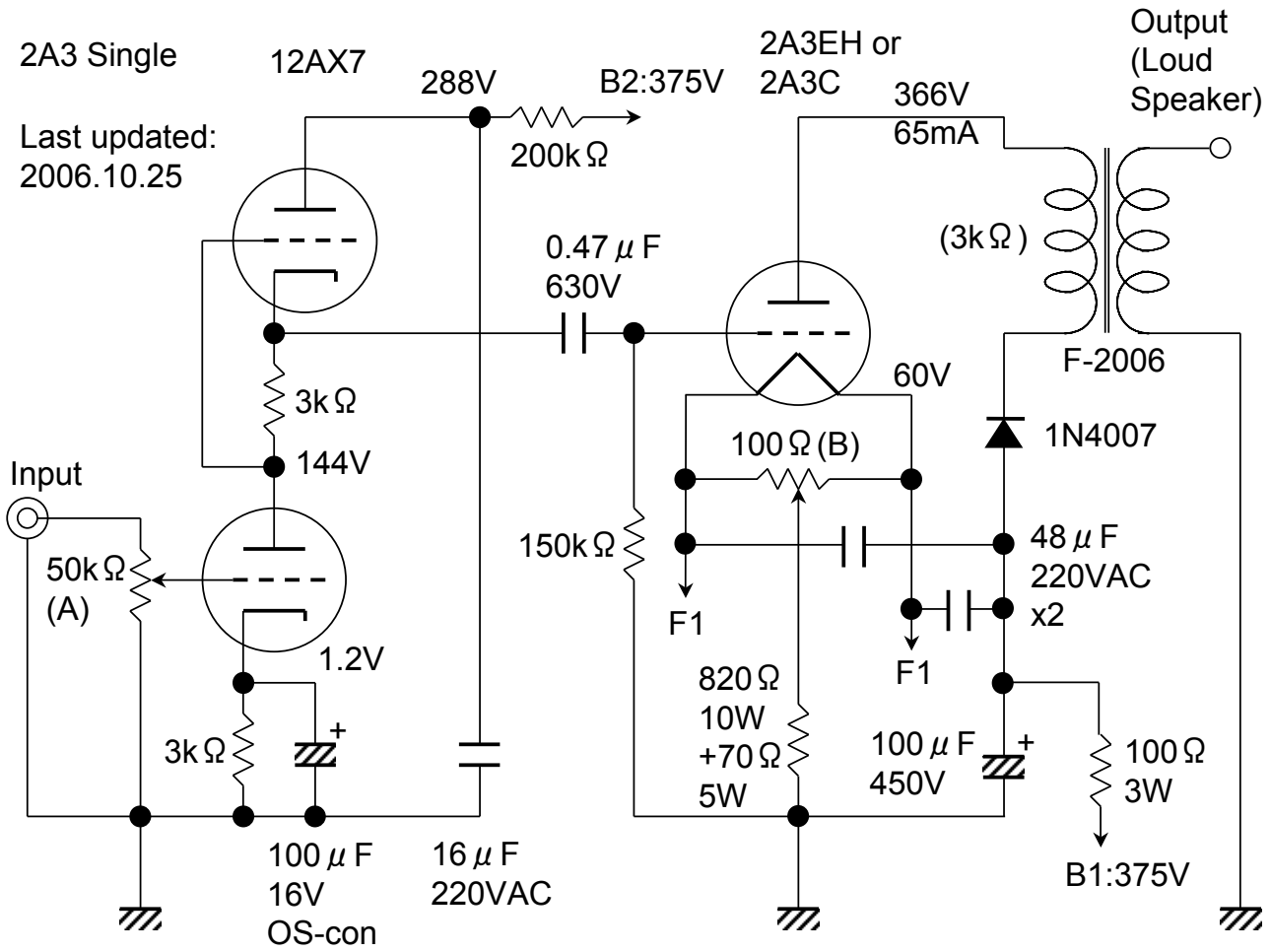
2A3 Single
Last updated:
2006.10.25
12AX7
288V
B2:375V
200kΩ
2A3EH or
2A3C
366V
65mA
Output
(Loud
Speaker)
(3kΩ)
0.47μF
630V
F-2006
60V
3kΩ
144V
1N4007
100Ω(B)
Input
150kΩ
48μF
220VAC
x2
50kΩ
(A)
F1
F1
1.2V
820Ω
10W
+70Ω
5W
3kΩ
100μF
450V
100Ω
3W
100μF
16V
OS-con
16μF
220VAC
B1:375V

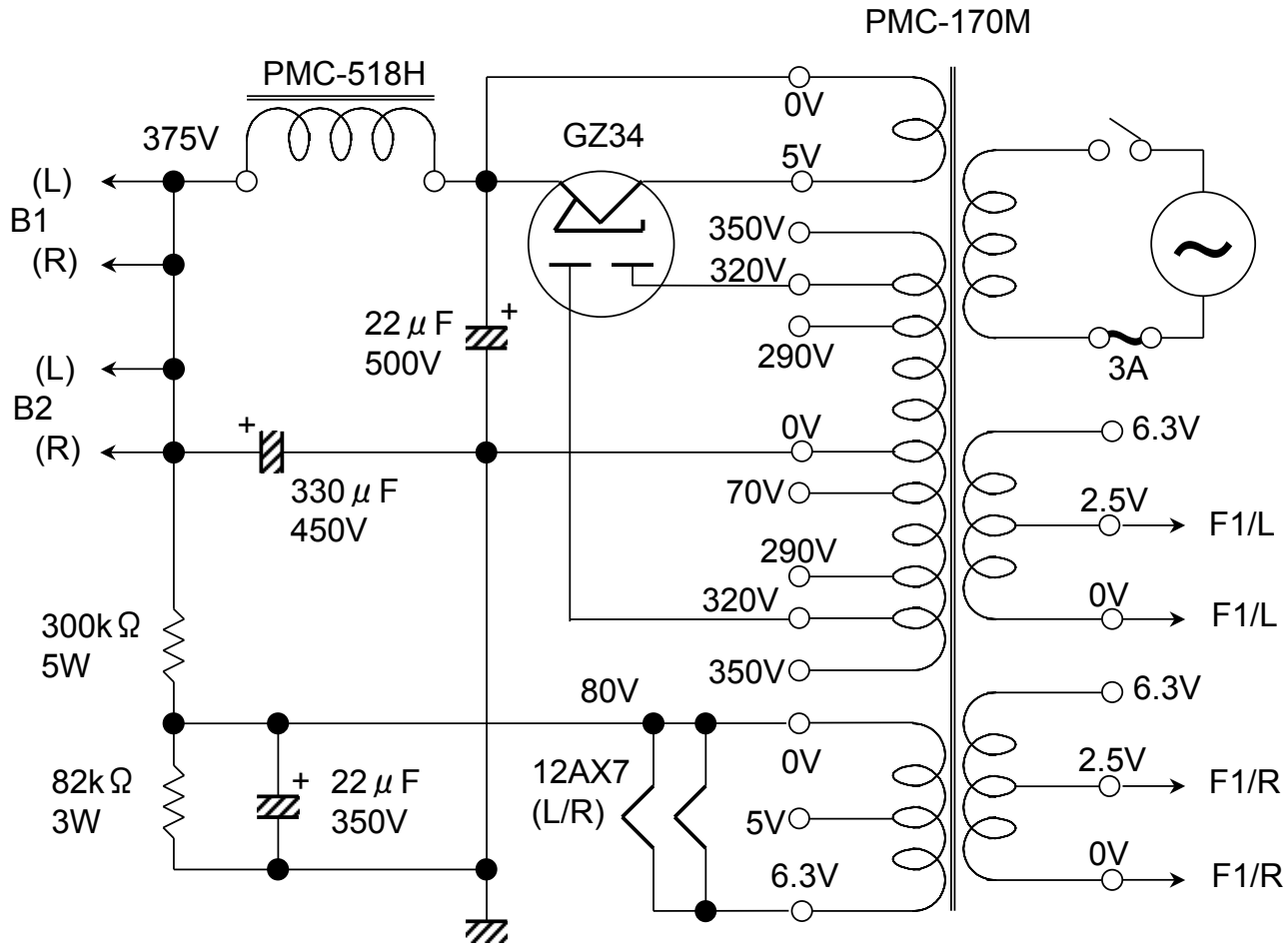
PMC-170M
PMC-518H
375V
GZ34
0V
5V
(L)
B1
(R)
350V
320V
22μF
500V
290V
3A
(L)
B2
(R)
0V
6.3V
330μF
450V
70V
2.5V
F1/L
290V
320V
0V
F1/L
300kΩ
5W
350V
80V
6.3V
82kΩ
3W
22μF
350V
12AX7
(L/R)
0V
2.5V
F1/R
5V
0V
6.3V
F1/R