8B8 Loftin-White Circuit Power Amplifier
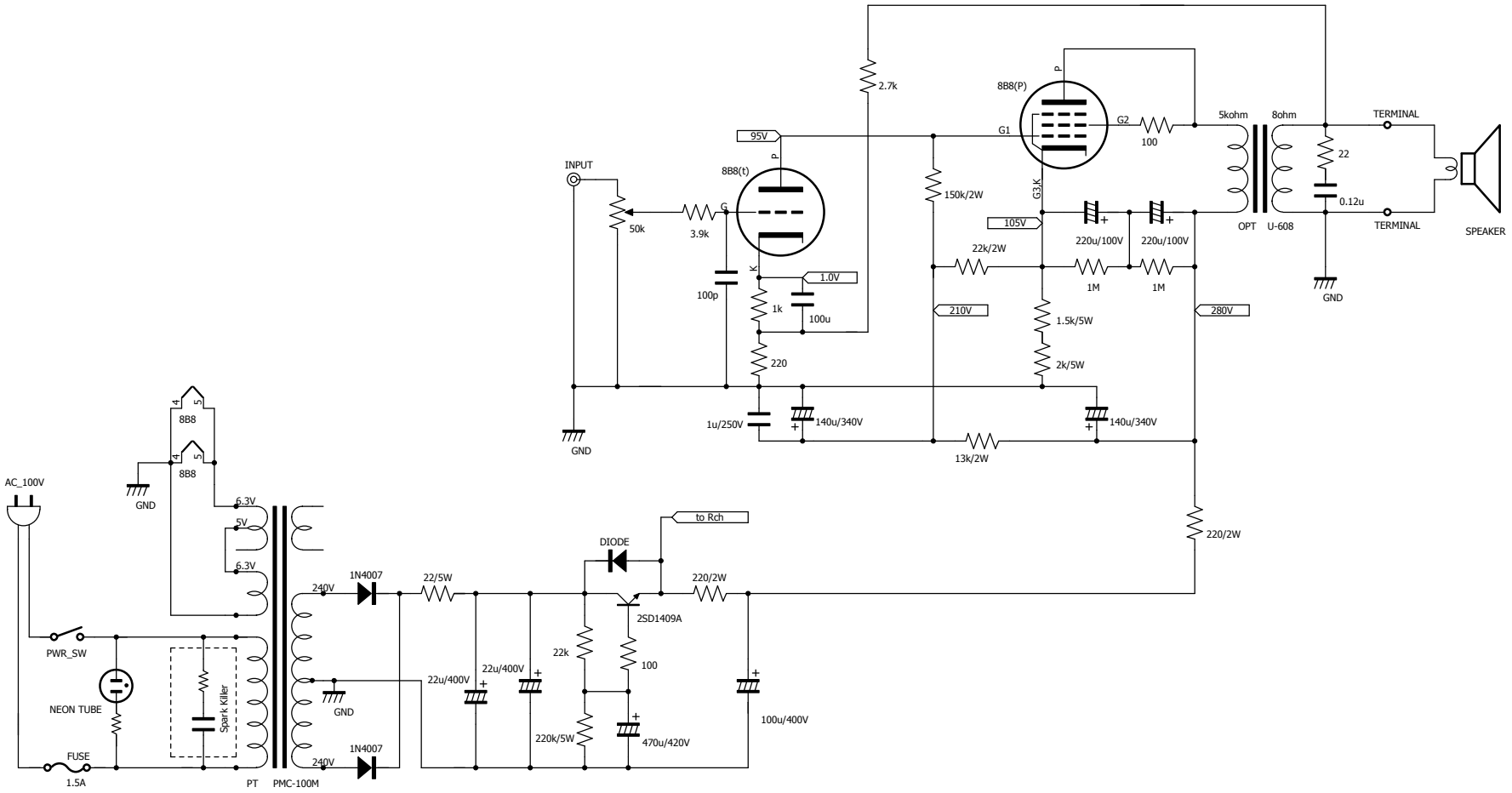
Designed by M. Noguchi.
July 7, 2007.