8B8 Loftin-White Circuit Power Amplifier
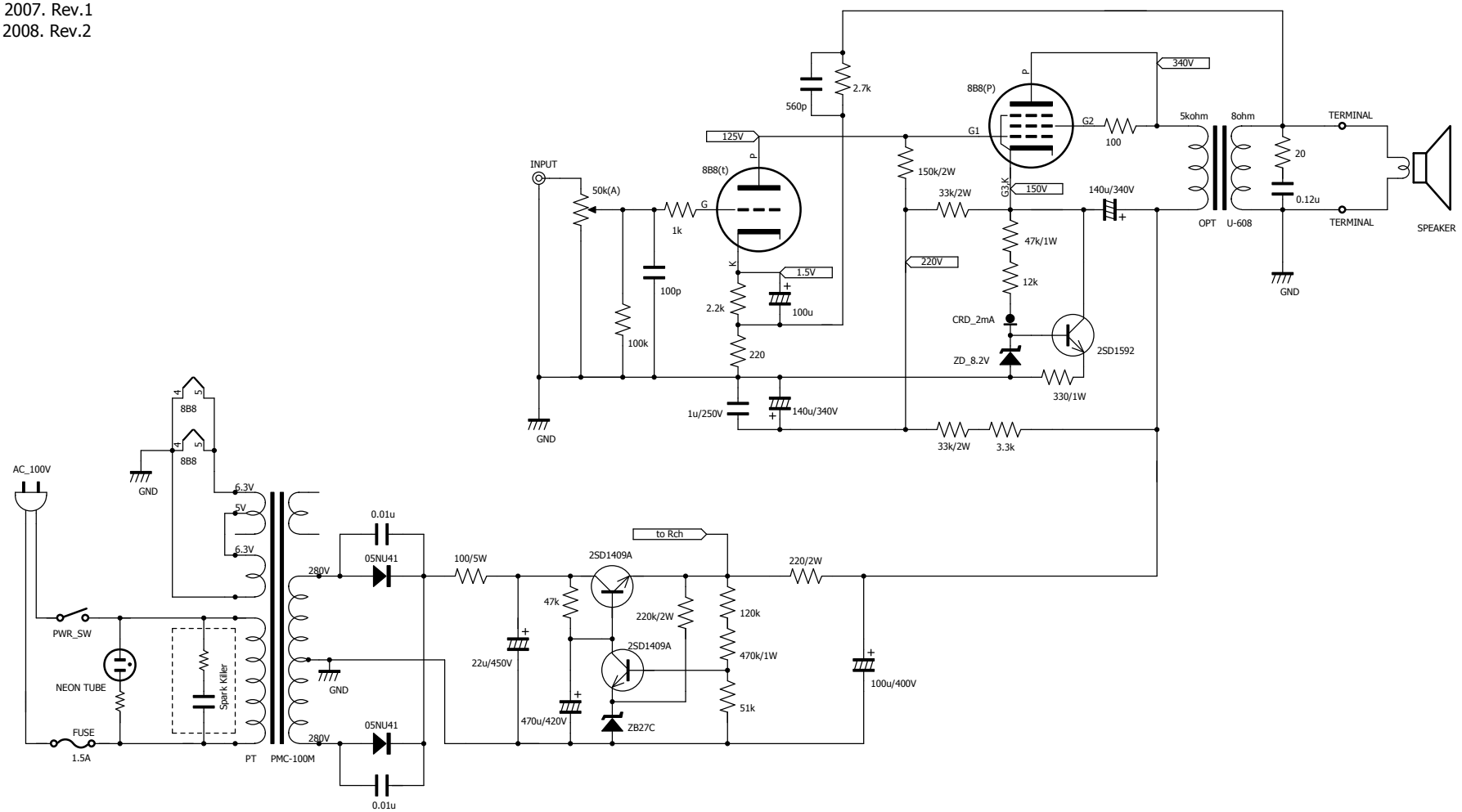
Designed by M. Noguchi.
July 7, 2007.
July 20, 2007. Rev.1
Feb 19, 2008. Rev.2